MPPT

Solar Charge Controller

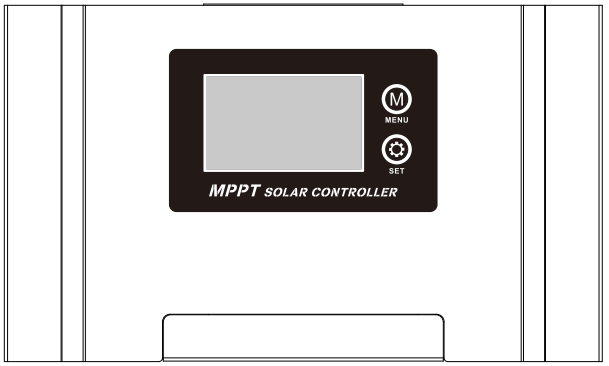

User Manual

Content

⚠ Warning

This is A class inverter. It might cause slightly radio interference in daily life.

And practical measure is required to take under this condition.

1. Description and Product Features

Thank you for choosing MPPT solar charge controller. Based on advancedMPPT algorithm design, the controller adopts graphical LCD dynamic display topresent its running status.

With the MPPT algorithm, the controller can quickly track the maximumpower point of the PV array; Promptly acquire the maximum energy of solarmodules to improve power generation. Users are access to extended application with the adoption of standard modbus RS485 communication port.

Product Features:

- Efficiency is higher than 99.5% by adopting advanced MPPT tracking technology;
- Automatic system(12V/24V/48V DC) identification;
- Temperature compensation for battery;
- Vatious working patterns: lighting control, lighting and time control, general mode;
- Discharge rate corrective control, set cut-off discharge voltages according to different discharge rate;
- Life of battery is greatly prolonged by scientific battery management and three-stage charging: fast charge, constant charge and float charge;
- Through the LCD display, users can timely and intuitively know about the operation of solar system and choose working mode according to the using environment;
- Every component and fuse is preventing from damage or burn through series of protection(overcharge, over discharge, overload, over-temperature protection, electronic short circuit protection and anti-reverse protection);
- Display and set through LCD screen, complete all setting through one button, intuitive and easy to use.

2. Description of System

The controller is designed for solar DC power supply system, solar DC streetlamp system, and small solar power plant system by adopting special- purpose microprocessor to achieve intelligent control.

In addition, the controller protects systems from short circuit, overload, and reverse connection. And it shuts down (charged-full or overcharged) and recovers automatically based on the condition of battery. It also provides detailed indication of charging and errors, and shows the state of battery and loads. It realizes the control of battery by collecting and calculating data of battery and PV allay voltage, discharging and charging current as well as temperature of environment. Life of battery is greatly prolonged by three-stage charging control, which makes sure of the best working state of battery, Also, various needs can be fulfilled by the multiple working modes of controller.

3. Safety information

CAUTION!

Risk of electric shock.
Each circuit must be individually disconnected and the service person must wait 5 minutes before servicing.

4. Connection and Application

1) The controller should be installed firmly as close as possible to be the battery.
2) Cable: please use cables matching with the charging current. Calculate the length and strip about 5mm length of insulated leather and connect the wire to the controller. The cable is supposed to be as short as it can to make sure of less wastage. The system cable is selected for the density of current (≤5A/mm²).
3) Connect the battery: Determine the appropriate number of batteries according to the controller's rated battery voltage. Connect the battery cable to a circuit breaker that meets the breaking capacity, and then connect it to the BATTERY terminal of the controller. Please note that the positive and negative poles are not allowed. Reverse connection, otherwise the product may be damaged. If the connection is correct, the LCD display will light up and display the relevant status parameters, otherwise, you need to check whether the connection is correct.
4) Connect the solar panels: first connect the PV cable to a circuit breaker that meets the breaking capacity, and then connect it to the PV terminal of the controller. Please note that the positive and negative poles cannot be reversed, otherwise the product may be damaged. If the connection is correct, when there is sunlight, the LCD display will display the relevant status parameters, otherwise, you need to check whether the connection is correct.
5) Connection of loads: connect load to the output of controller. Please connect the negative and positive poles are connected correctly.
6) Do not connect the inverter or other load with large inrush current to the DC load output of this controller. Connect the inverter directly to the battery.
7) Selection of circuit breaker
a. The circuit breakers on the PV side and the battery side should use DC circuit breakers, and the working voltage of the circuit breaker should be greater than the actual application voltage.
b. When the controller is working, the rated current of the circuit breaker should be approximately 1.5 times the maximum current.

8) Controller entry and exit line illustration:

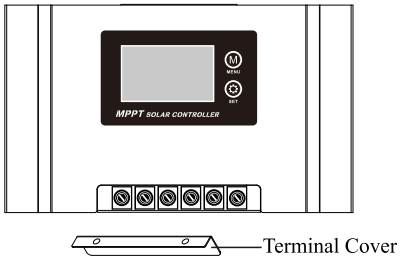

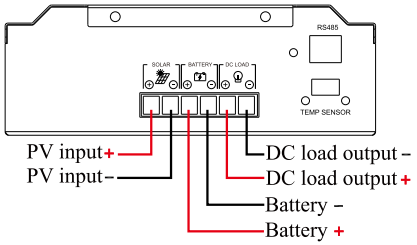

① Remove the terminal cover

② Connect solar panels, batteries and DC loads in the order indicated above

9) Wiring diagram:

(Remarks: please refer to the technical parameter table for specific battery voltage and solar panel parameters, this figure is only a wiring schematic diagram.)

10A/20A/30A

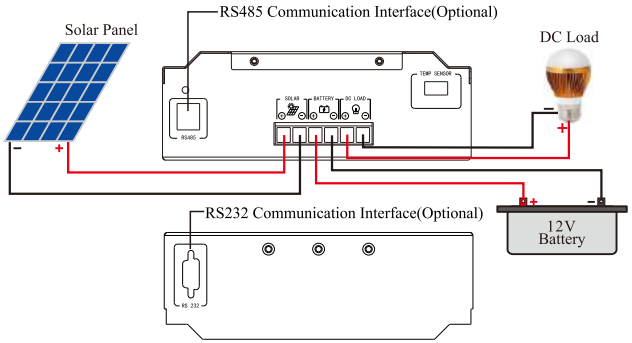

40A/50A/60A

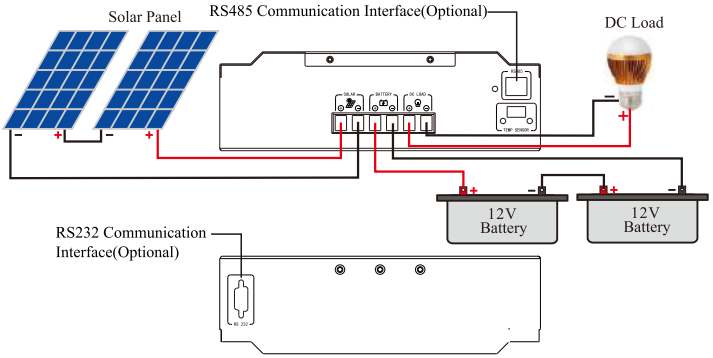

80A/100A

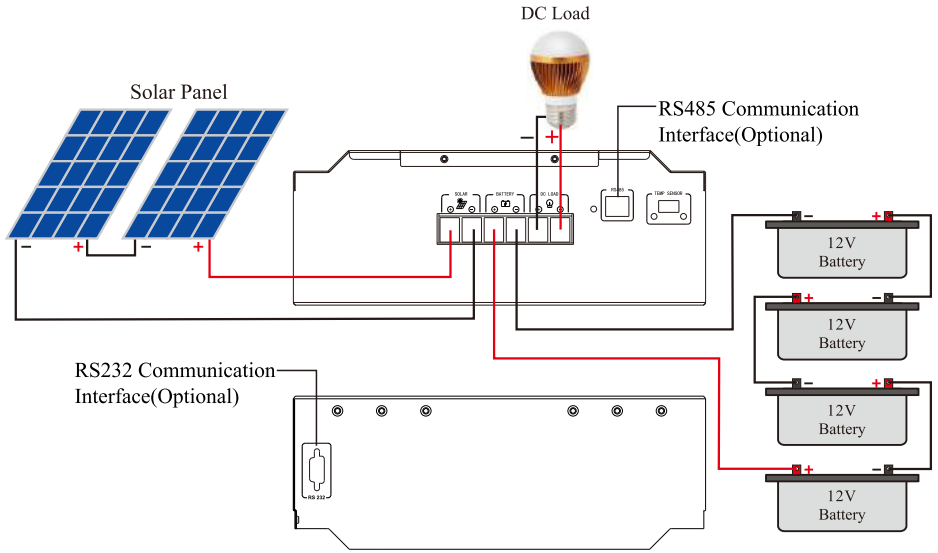

Note:

- The installation of the solar system components should be followed by battery --load--PV array;
- Please do not open the air switch or fuse during the connection, and make sure that the positive and negative poles of the parts are connected correctly;
- Sequence of disconnection is as follow: PV array--load--battery.

5. Description of Panel

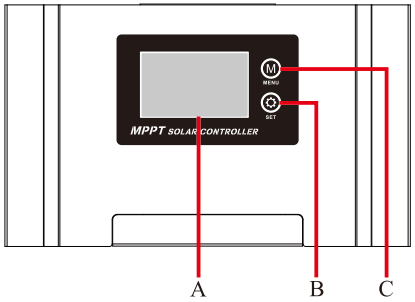

A	LCD Display
B	Setting Button
C	Menu Button

6. Application Instruction

1) Button and operation

Mode	Note
Load switch	When the load is set to general mode, tap the menu key to turn the load on or off.
Browsing mode	Press the SET button on the main screen to view the relevant tun data.
Set the mode	Press the SET button to select the item to be modified.Press the set button to exit the setting mode.

2) Main Interface

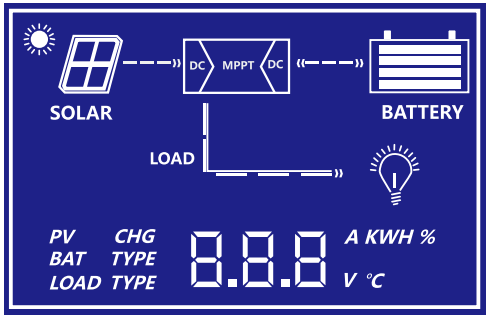

3) Description of State

Item	Icon	State
PV allay	SOLAR	Day/sunshine
	SOLAR	Night/no sunshine
Battery	BATTERY	Power and voltage
	BATTERY	Over-discharge
Load		Turn on
		Shut down

4) Interface

Press the SET key on the main screen to view the relevant operating data.

Display	Description
BAT 12.8 V	Voltage of battery
PV 22.8 V	PV input voltage
CHG 22.8 A	Charging current
LOAD 22.8 A	Current of load
BAT 000 %	Percentage of battery capacity
BAT 000 ℃	Working temperature of battery
PV 000 KWH	Power generated by PV
BAT TYPE 000	Type of battery
LOAD TYPE 000	Type of load

5) Set the Charging Parameter

Setting: Long press the set button, BAT CHG words will flash, and then press the menu button to select the constant charging voltage for the battery BAT 12.8 V , for example: if the charging voltage is 14.6V, then press the menu button to set the value, then long press the set button to save and exit. Setting will be effective after re-powered on(settable range: 13.8V~14.8V).

6) Description of Mode

Light control: When there is no sunlight, the light intensity drops to the starting point, the controller delay for 10 minutes to confirm the start signal, according to the set parameters to turn on the load, which begins to work; When there is sunlight,the light intensity rises to the starting point, the load stops working.

Light control: Starting process is the same as light control. When the setworking time of load is up, the load will shut down automatically. Working time can be set from 1 to 15 hours.

General mode: Users can press the button to control the load on and off, regardless of whether it is day or night. This mode is suit for some special loads or commissioning.(Default)

7) Load mode setting

Setting: Long press the set button, LOAD TYPE words will flash, and then press the menu button to select a load type LOAD TYPE 000 , then long press the set button to save and exit. Setting will be effective after re-powered on. Code for load type:

Code	Mode
100	Light control
101	The light control turns on the load and shut it down after 1 hour
102	The light control turns on the load and shut it down after 2 hours
103-113	The light control turns on the load and shut it down after 3-13 hours
114	The light control turns on the load and shut it down after 14 hours
115	The light control turns on the load and shut it down after 15 hours
001	General mode(default)

7. Specification

Model: Wonder1	150/10, 150/20, 150/30	150/40, 150/50, 150/60	150/80, 150/100
Rated Current	10A/20A/30A	40A/50A/60A	80A/100A
Rated System Voltage	12V/24V/48V auto recognition		
Max PV Input Voltage(Voc) (At the lowest ambient temperature)	150V		
MPPT Tracking Voltage Range	12V System: 15V-120V; 24V System: 30V-120V; 48V System: 60V-120V		
Recommended operating voltage range	12V System: 15V-20V; 24V System: 30V-40V; 48V System: 60V-80V		
PV array Max power	12V system: 140W(10A)/280W(20A)/420W(30A)/560W(40A)/700W(50A)/840W(60A)/1120W(80A)/1400W(100A); 24V system: 280W(10A)/560W(20A)/840W(30A)/1120W(40A)/1400W(50A)/1680W(60A)/2240W(80A)/2800W(100A); 48V system: 560W(10A)/1120W(20A)/1680W(30A)/2240W(40A)/2800W(50A)/3360W(60A)/4480W(80A)/5600W(100A)		
Battery Type	Lead acid battery(Battery type base on user charge specification)		
Floating Voltage	13.8V Single battery		
Charge Voltage	14.2V Single battery		
Charging Protection Voltage	15.5V Single battery		
Increase Protection Voltage	13.8V Single battery		
Low Voltage Recovery Point	12.5V Single battery		
Discharge Limiting Voltage	10.5V Single battery		
Temperature Compensation Coefficient	-3mV / ℃ / 2V (25℃ is base line) (Optional)		
Charging Mode	MPPT maximum power point tracking		
Charging Method	Three stages: constant current(MPPT); constant voltage; floating charge		
Protection	Over-voltage/under-voltage/over-temperature/PV anti-reverse protection		
Conversion Efficiency	＞98%		
MPPT Tracking Efficiency	＞99%		
Machine Size(L*W*Hmm)	185x135x65	240x143x74	280x180x105
Package Size (L*W*Hmm)	224x171x94(1pc) 351x233x196(4pcs)	281x181x103(1pc) 371x290x214(4pcs)	321x224x134(1pc) 457x330x142(2pcs)
N.W(kg)	1.15(1pc)	1.8(1pc)	3.7(1pc)
G.W.(kg)	1.35(1pc)	2.0(1pc)	4.0(1pc)
System Parameter			
Display	LCD		
Thermal Method	Cooling fan in intelligent control		
Type Of Mechanical Protection	IP20		
Operating Temperature	-15℃～+50℃		
Storage Temperature	-20℃～+60℃		
Elevation	2000m(Dreating above 2000m)		
Humidity	5%~95%(No condensation)		
Communication	RS232/RS485(Optional)		

Note: All specification is subject to change without prior notice

8. Protection and Troubleshooting

7-1: Protection

【PV array over-current】

If it exceeds the rated power of the controller, the controller will charge at rated power. Therefore when the PV array does not match the parameters, it may not work on the maximum power.

【PV array polarity reversal】

When the polarity of the PV array is reversed, the controller will not be damaged and the controller still works properly after wiring properly.

【Battery over-voltage】

When battery voltage reaches the over-voltage, the controller will automatically stop charging the battery to prevent the battery from overcharging and damage.

【Battery over discharge】

When battery voltage reaches the low voltage, the controller will automatically stop the battery discharge, to prevent the battery over discharge and damage.

【Battery over-temperature】

The controller detects the battery temperature through an extern temperature sensor. When the battery temperature exceeds 65℃ will stop working, less than 55℃ to resume work.

【Load overload】

If the load current exceeds 1.2 times the rated current of the controller, the controller will turn off the load. When the overload occurs, you can reduce the electrical equipment and then press the menu button to turn on the load output again.

【Short circuit】

When the load side of the short circuit (≥ 4 times the rated current), the controller will automatically protect.

【Controller over-temperature】

The controller detects the internal temperature of the controller through the internal sensor. When the internal temperature exceeds 85℃ will stop working, less than 75℃ to resume work.

【Temperature sensor damage】

When the temperature sensor is short-circuited or damaged or is not connected, the controller will charge or discharge at 25℃ by default to prevent overcharging or over-discharge of the battery.

【 High voltage surge protection 】

This product can protect high-voltage surges with low energy. In areas with frequent lightning, it is recommended to install large-capacity lightning arresters on the PV input terminals.

7-2: Troubleshooting

Code for alarm

Code for alarm	Reason	Solution
A01	Overheat protection	Please check whether overload and reduce load
A02	Battery high voltage protection	Please disconnect the PV module
A03	Internal saving data error	Internal saving data error
A04	Internal reference voltage error	Please contact the supplier
A05	Output short-circuit protection	Please check whether the user device is short circuited or Starting current is too large
A11	Overload alarm / protection	Please reduce load
A14	Battery low voltage protection	Please turn off the load, recharge the battery and reboot inverter
A15	PV input high voltage	Please check if the PV module voltage exceeds the controller specifications
A16	NTC fault	Please contact the supplier
A17	Battery high voltage fault	Please contact the supplier

Common troubleshooting

Problem	Possible cause	Solutions
Normal wiring but LCD is off	Battery voltage too low	Charge battery
A02	Battery over-voltage	Disconnect solar arrays and use multi-meter to check battery voltage
A14	Battery over-discharged	Controller turn off the output automatically and restrore
A11	Over load	Disconnect some loads
A05	Short circuit	Check the output connection

9. Installation

1. Allow 150mm space around the equipment to make the air circulating.

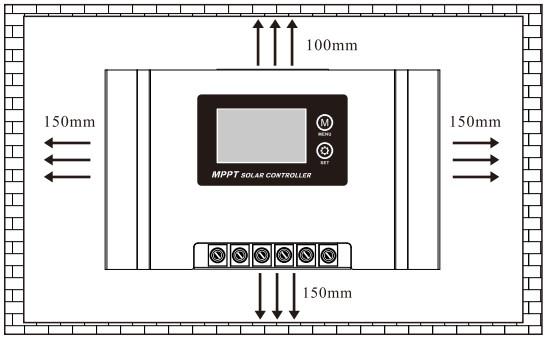

2. Controller size and installation dimension

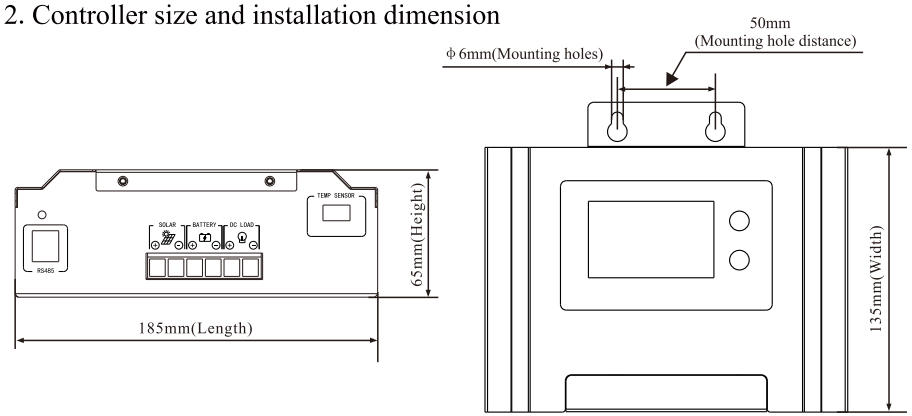

10A/20A/30A

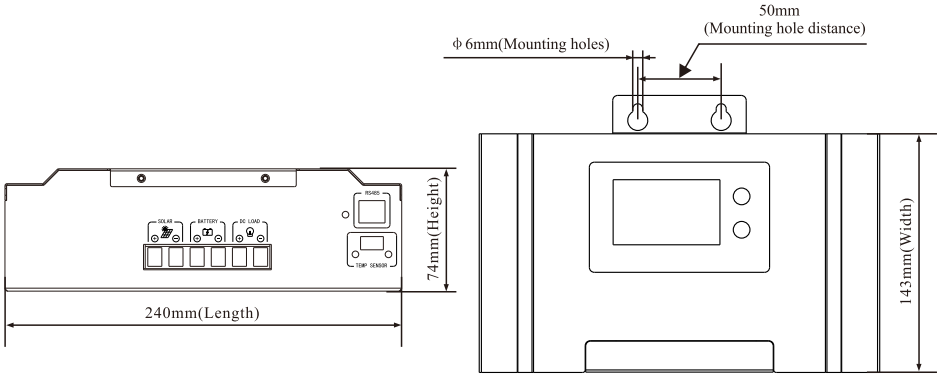

40A/50A/60A

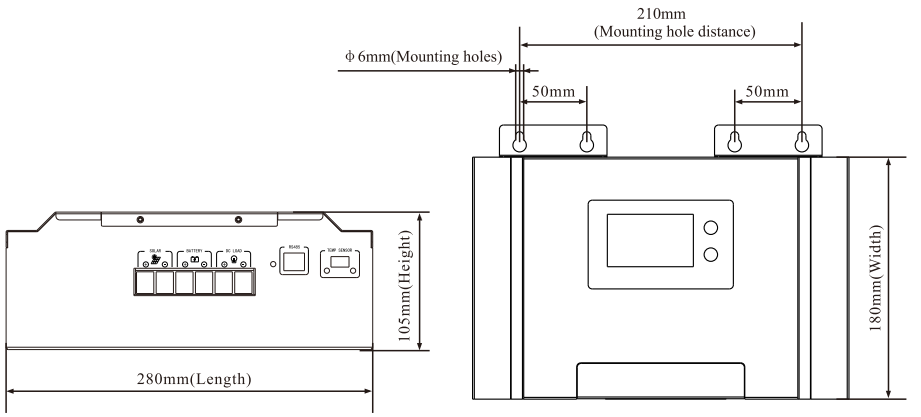

80A/100A

10. Appendix: 485 Communication Port(Optional)

8-1: Definition of pin:

PIN1--------RS485-A	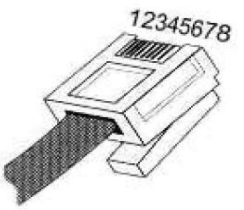
PIN2--------RS485-B	
PIN3--------NC	
PIN4--------GND	
PIN5--------NC	
PIN6--------NC	
PIN7--------NC	
PIN8--------NC	

Note: refer to as not connect.

Warranty Card

Customer Name: _____ Tel.: _____

Address: _____

Brand: _____ Model: _____

Serial No.: _____ Date of Purchase: _____

Bought From: _____

Invoice Number: _____ Invoice Price: _____

Warranty Instruction

- Please keep this warranty card as proof of maintenance.
- The warranty period is 1 year from the date of purchase.
- During the warranty period, under the condition of normal use and maintenance, if damage caused by the product's own quality, the company will provide free repair and replacement parts after verification.
- The company reserves the right to maintain and interpret all contents.

Free maintain won't be given under the following circumstance:

- The damage caused by the manipulation that hasn't follow the requests of the manual.
- The product has been repaired, modified by technicians other than our company's, and any internal parts of the product have been replaced by users.
- The product number has been altered or product is inconsistent with the warranty card.
- Damage caused by careless use, penetration of water or other substances into the product.
- Damage caused by accident or natural disaster.

Certificate

Name: _____

Model: _____

Inspectors: _____

Date: _____

Products have been tested qualified by standard and permitted to deliver.